Programmable Logic

Digital System Fundamentals

Sorayut Glomglome

Learning Outcome

- Discuss the types of programmable logic, SPLDs and CPLDs, and explain their basic structure
- Describe the basic architecture of two types of SPLDs—the PAL and the GAL
- Explain the basic operation of a look-up table (LUT)
- Distinguish between CPLDs and FPGAs

CONTENTS

1. Simple Programmable Logic Devices

2. Complex Programmable Logic Devices

3. Field-Programmable Gate Arrays

Common IC Breadboard Clock

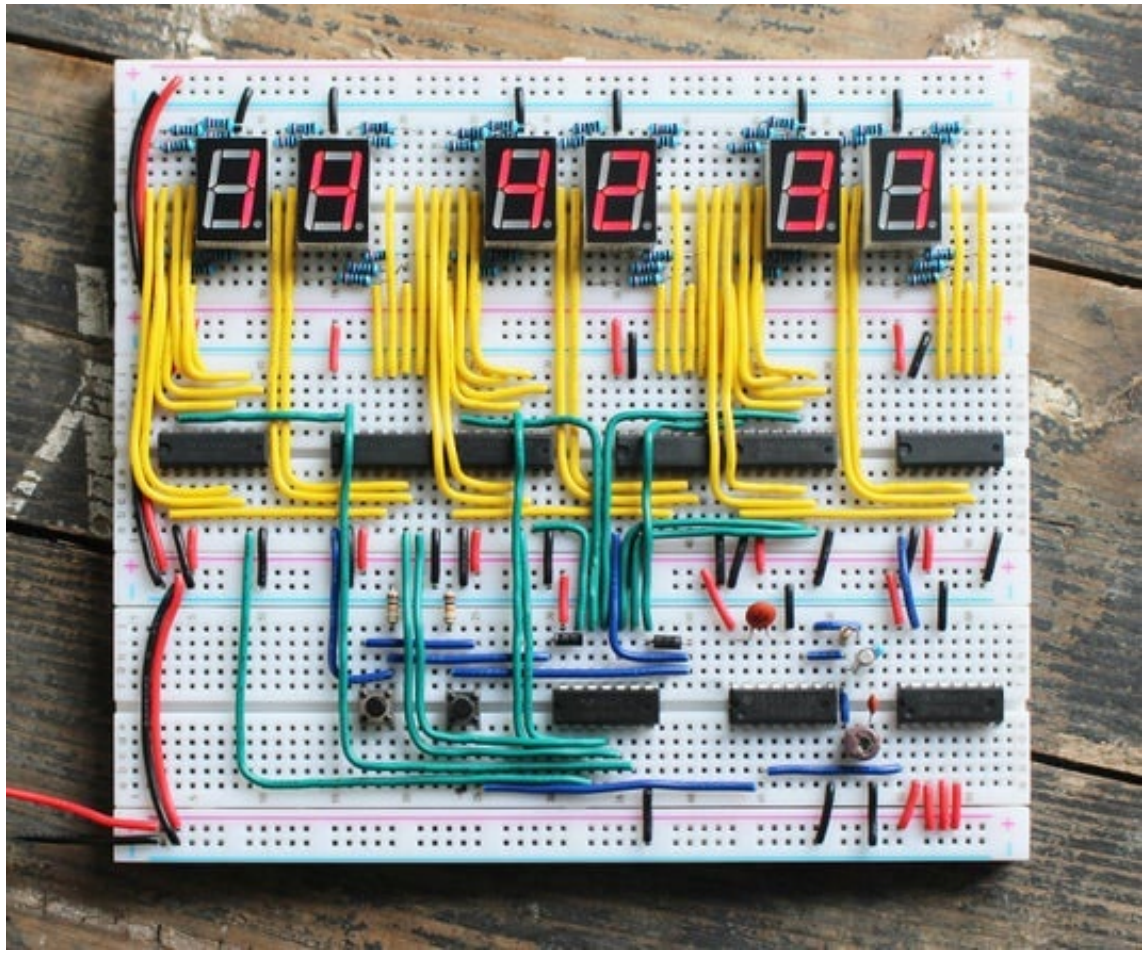

Common IC Breadboard Clock : 7 Steps (with Pictures) - Instructables

The Cambridge-1:
A 4-bit homebrew 7400 based CPU

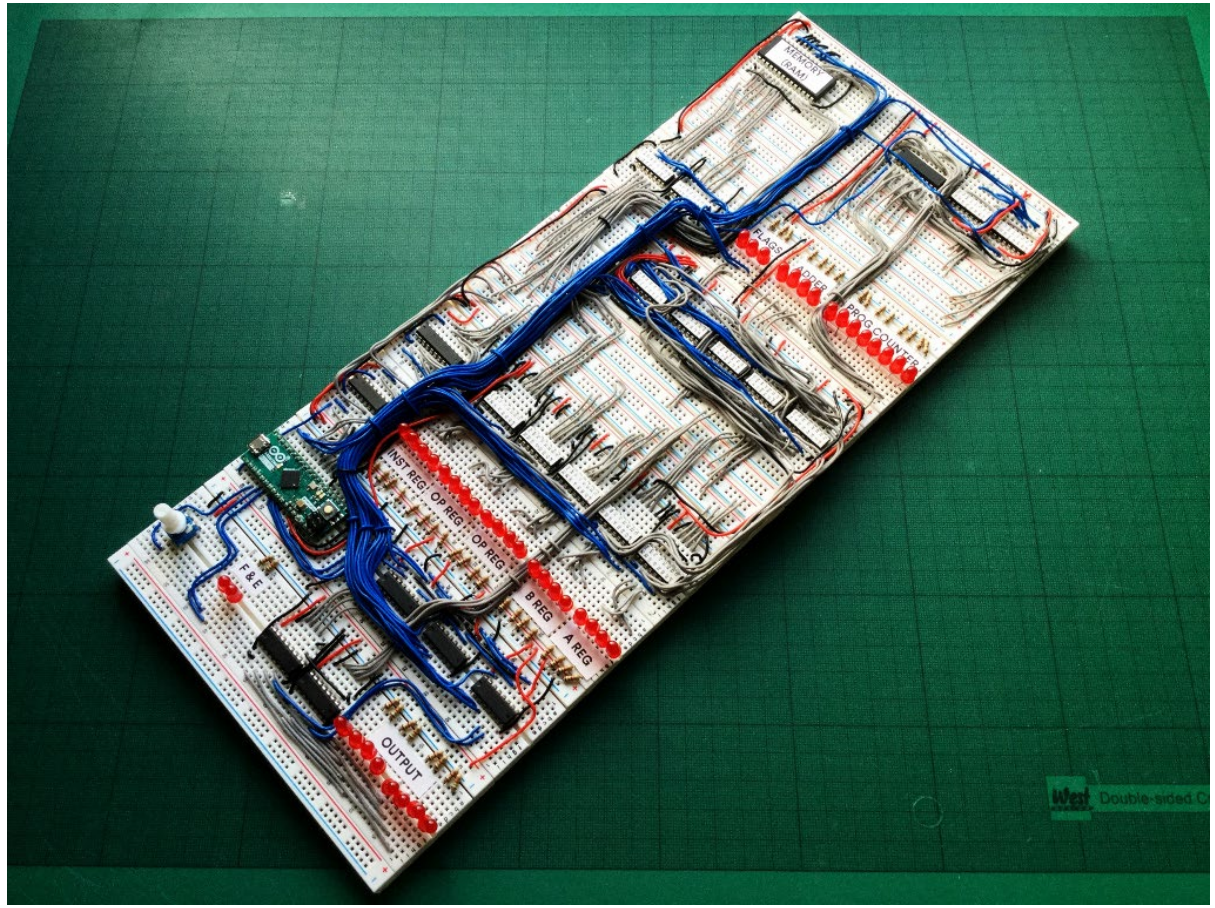

Building the Cambridge-1: A 4-bit homebrew 7400 based CPU

Programmable Logic Hierarchy

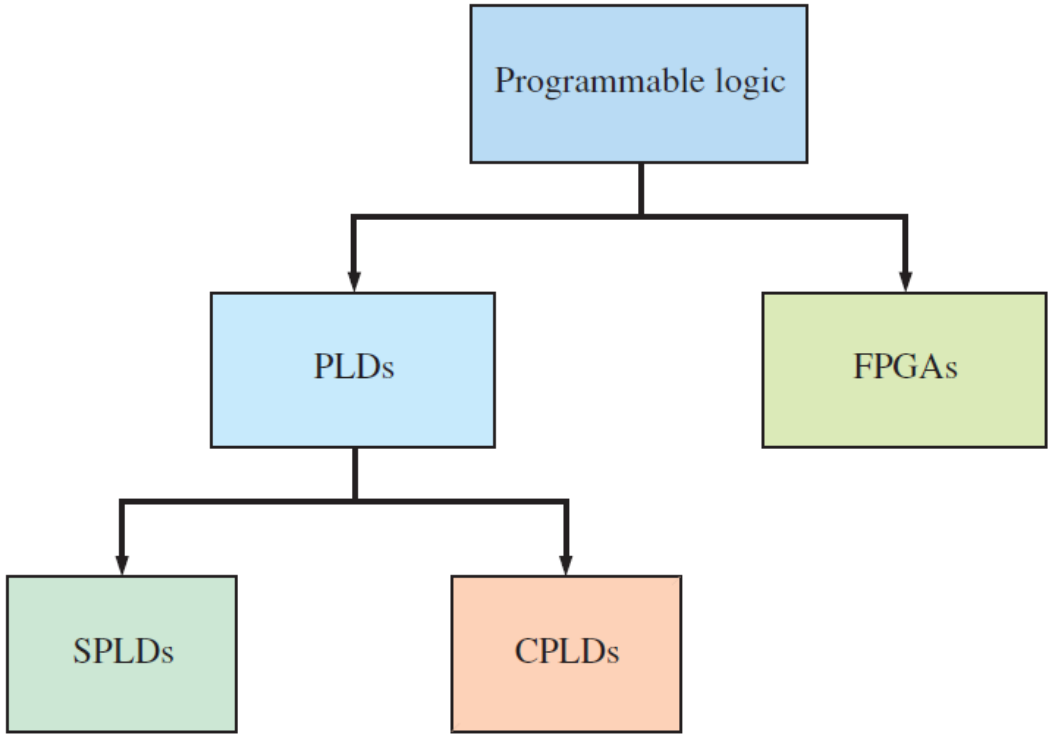

1. Simple Programmable Logic Devices (SPLDs)

PAL : Prorammable Logic Device

- PAL Structure
  - Programmable array of AND gates.
  - Fix array of OR gates.
  - One-time programmable.
  - A PAL cell (Programmable link) is a fuse.
- Implement SOP expression

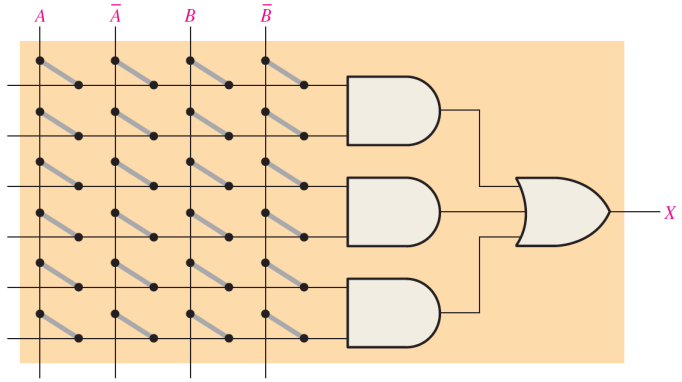

FIGURE 10–1 Basic AND/OR structure of a PAL.

$$X = AB + A\overline{B} + \overline{A}\,\overline{B}$$

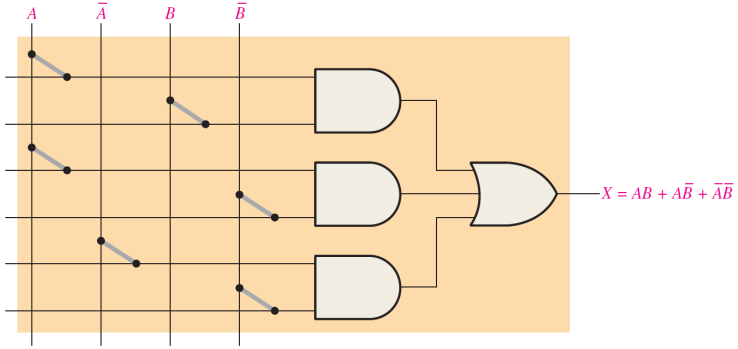

FIGURE 10–2 PAL implementation of a sum-of-products expression.

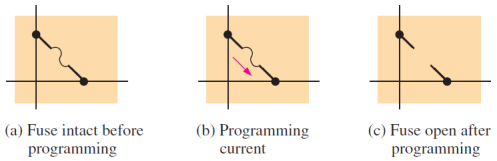

FIGURE 3–51 The programmable fuse link.

GAL : Generic Array Logic

- The same structure as PAL.
- Reprogrammable
  - CMOS

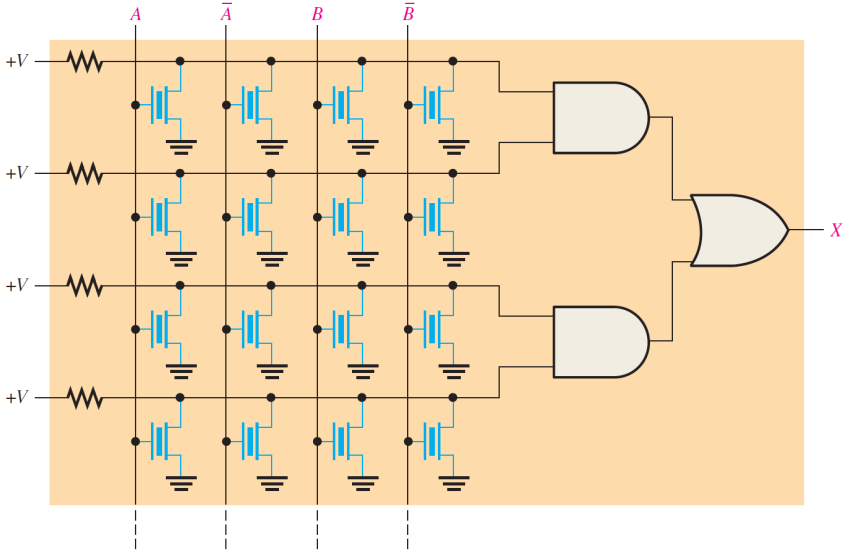

FIGURE 10–3 Simplified GAL array.

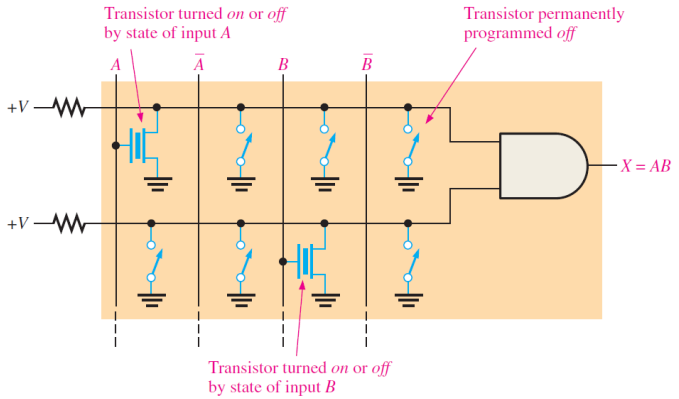

Simplified Notation for PAL & GAL

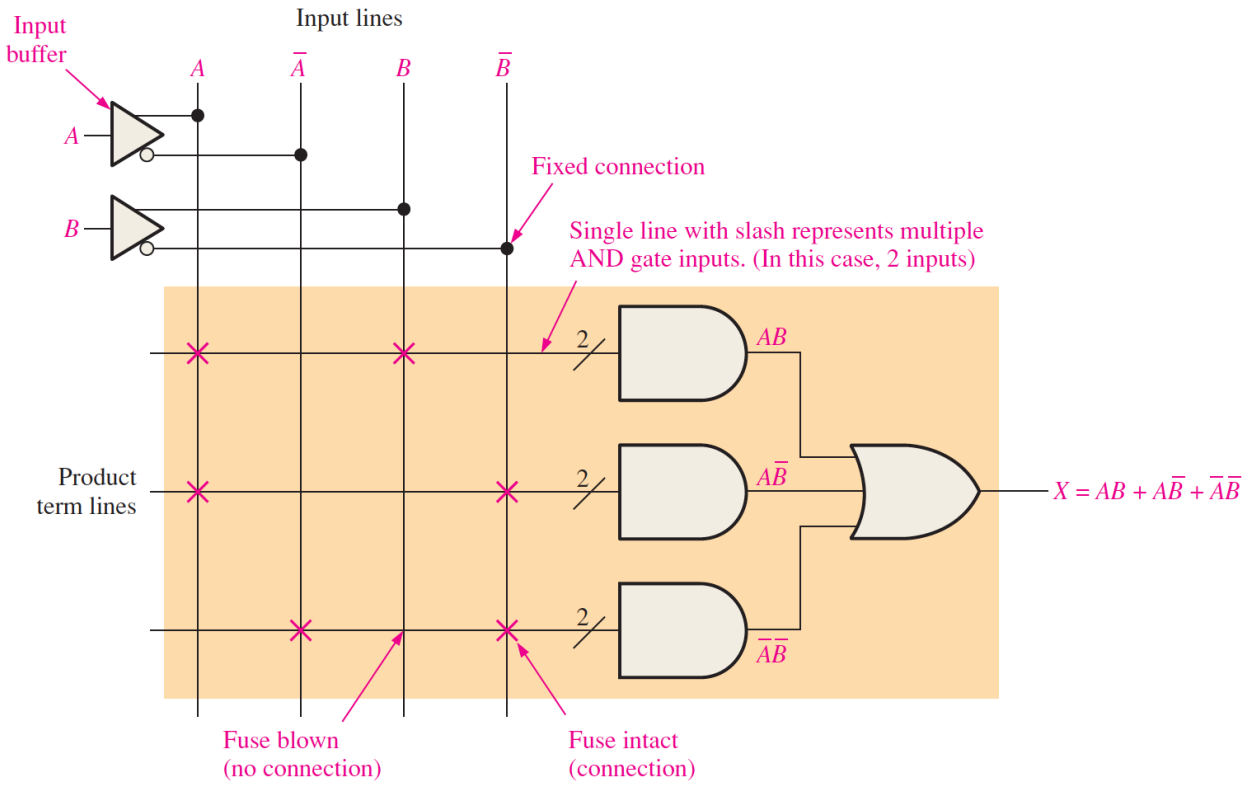

FIGURE 10–4 A portion of a programmed PAL/GAL.

Implement SOP Expression using PAL

$$X = A\overline{B}C + \overline{A}B\overline{C} + \overline{A}\,\overline{B} + AC$$

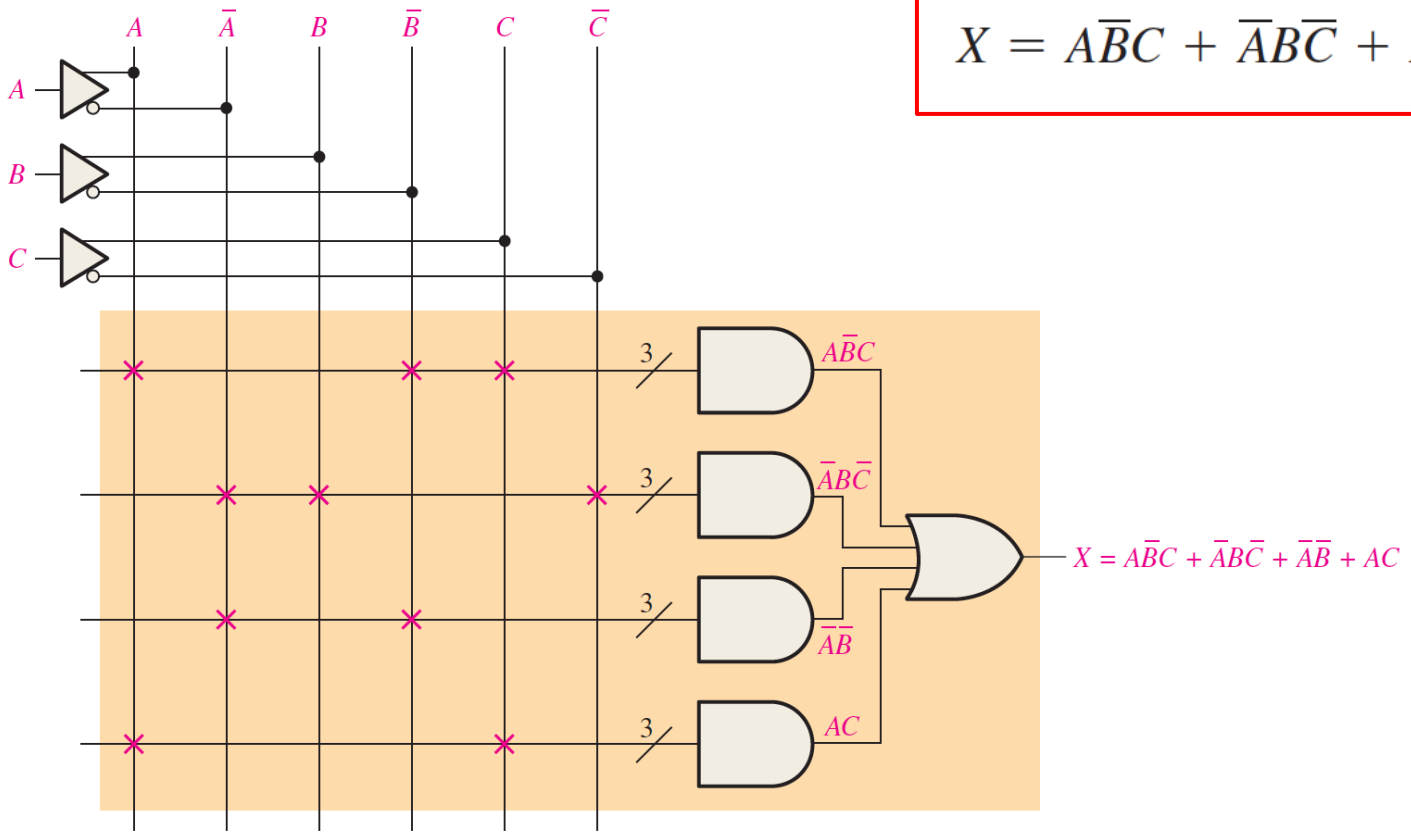

FIGURE 10–5

PAL/GAL General Block Diagram

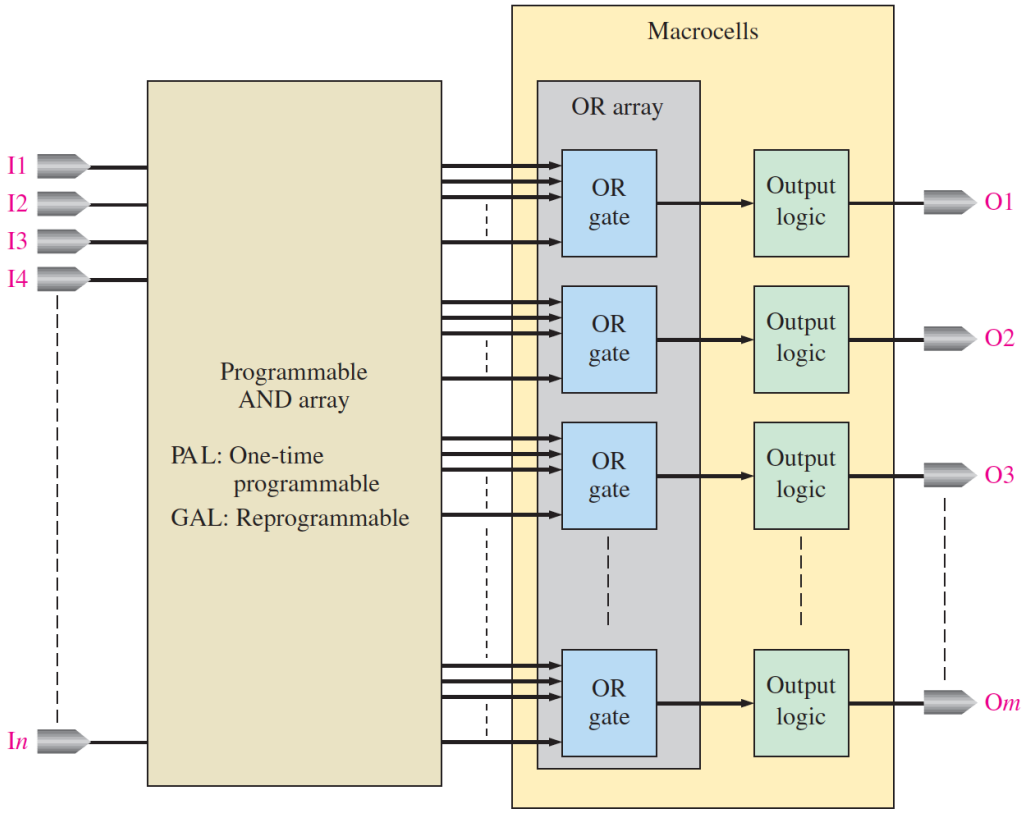

FIGURE 10–6 General block diagram of a PAL or GAL.

A Macrocell

- Structure
  - 1 OR gate
  - Output logic
- Output configuration
  - Combination logic
  - Registered logic (Flip-Flop)
  - Both

Macrocells | Basic Types

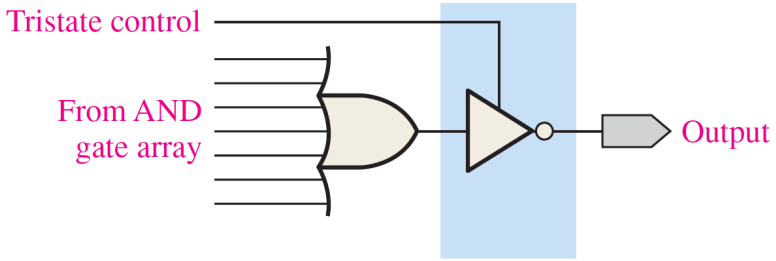

The output of the tristate inverter can be either HIGH, LOW, or disconncted.

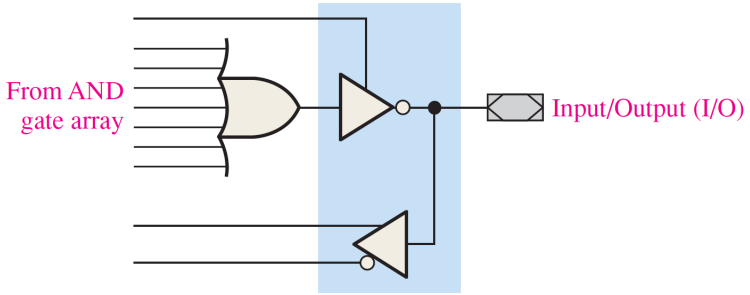

When used an input, the tristate inverter is disconnected, and the input goes to the buffer that is connected to AND array

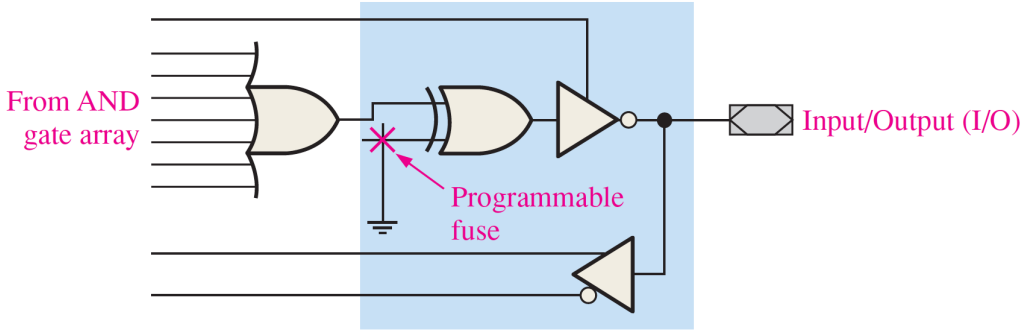

This macrocell can be used as either active-HIGH or active-LOW output or the input. One input of XOR gate is used to program active-High or activer-LOW output.

2. Complex Programmable Logic Devices (CPLDs)

Complex Programmable Logic Devices (CPLDs)

- Basically, a device that composed of multiple SPLD arrays with programmable interconnection.
- CPLDs are internally orgranizised varies with the manufacturer.
- LAB : Logic Array Block
  - Refer to each SPLD array
  - aka *function block, Logic block, or generic block.*
- PIA : Programmable Interconnect Array
  - Programmable Interconnection
  - aka Xilinx AIM (Advanced Interconnection Matric)
- Programmable memory
  - EEPROM
  - SRAM

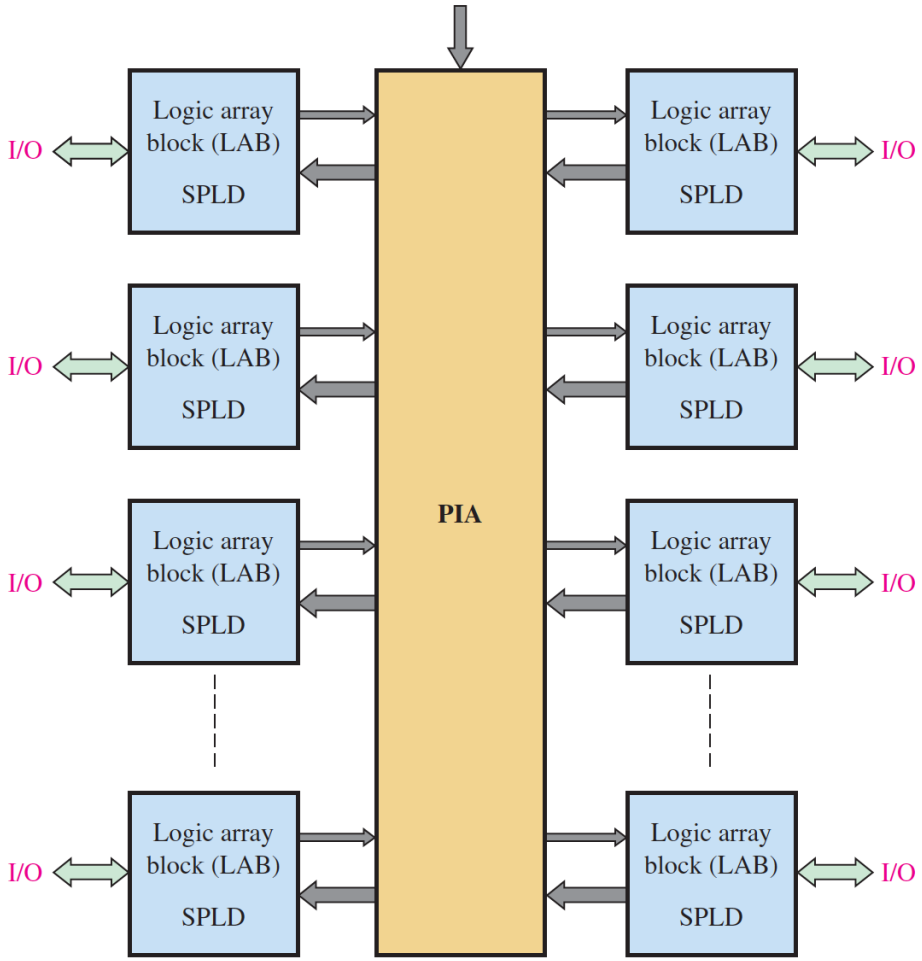

FIGURE 10–8 Basic block diagram of a generic CPLD.

Classic CPLD Architecture

- Typical density
  - 2 – 16 LABs
  - 44 - 208 pins
  - Nonvolatile memory
    - EEPROM
- 4 LABs
  - 16 Macrocells
- PIA links multiple LABs.

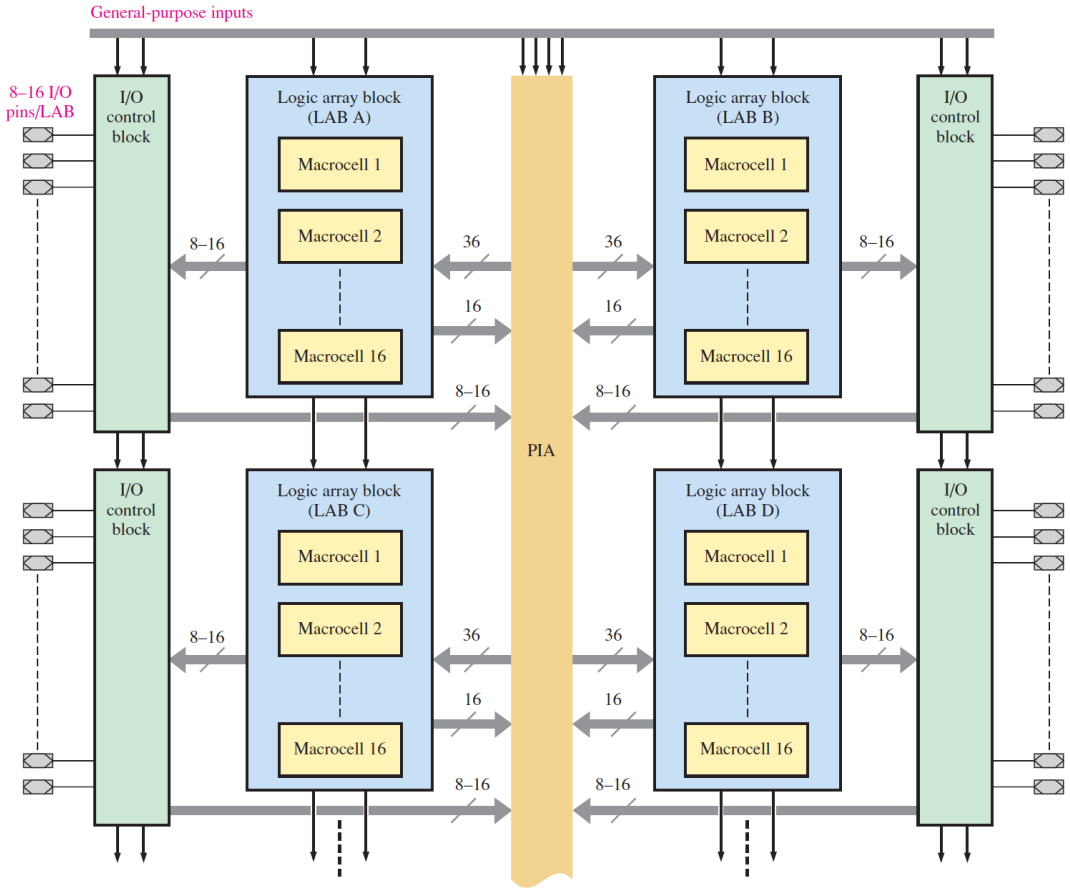

FIGURE 10–9 Basic block diagram of a typical CPLD.

LUT CPLD Architecture

- LAB contains LEs
- Logic Element
  - A basic logic design unit
  - Arrange in rows/columns
  - IOEs around the perimeter
    - Input/Output Elements

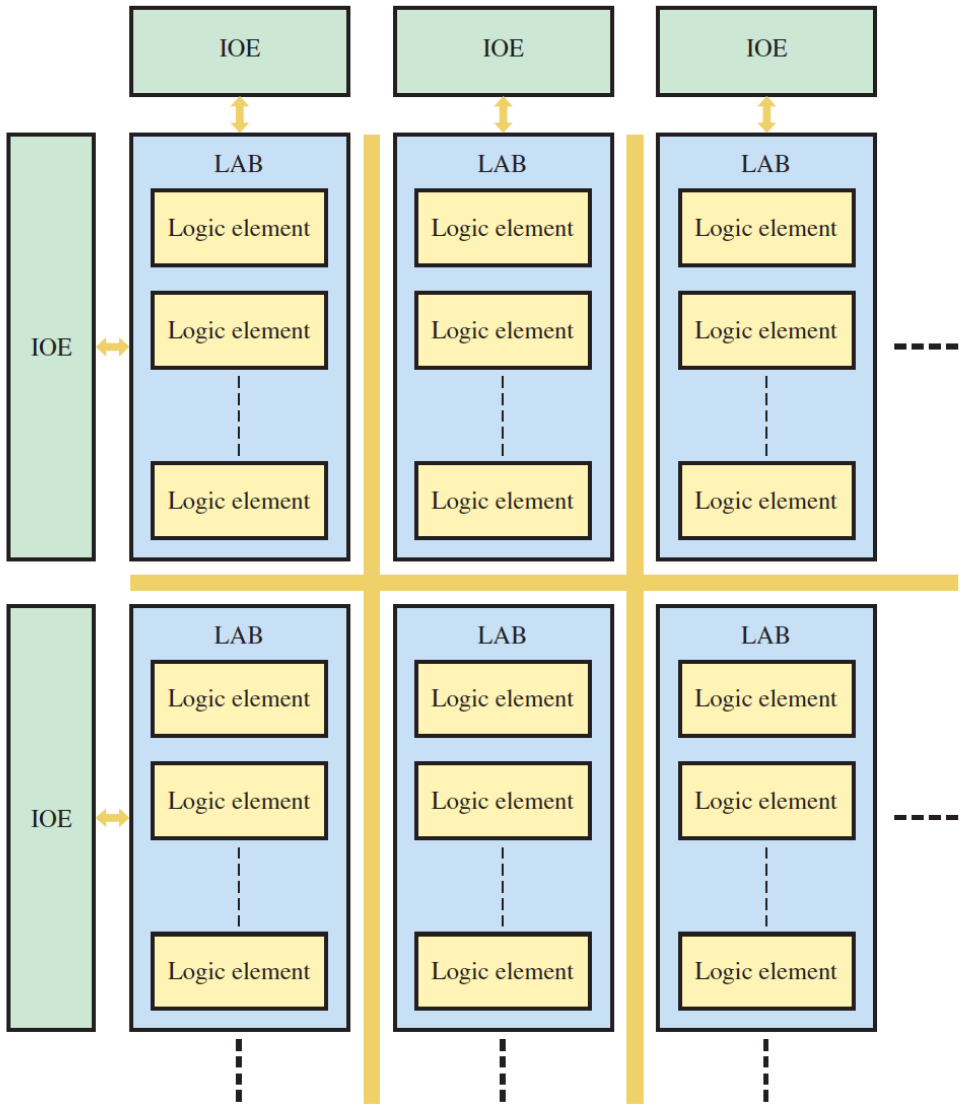

FIGURE 10–15 Simplified block diagram of an LUT CPLD.

LUTs

- Look-up Tables
- A type of memory
  - Programmed to produce SOP functions
- SRAM : Static Random Access Memory
  - Volatile
  - Need another nonvolatile chip

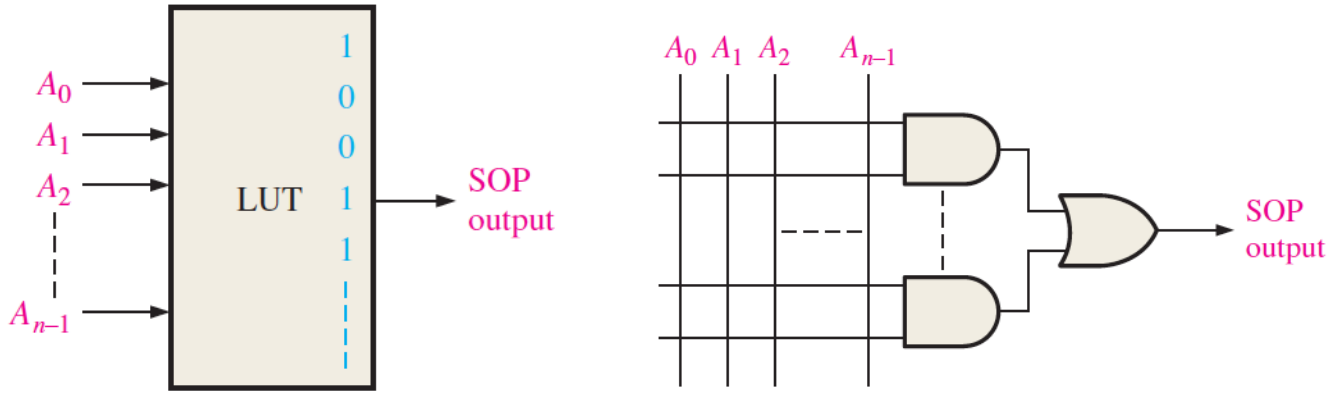

(a) Look-up table logic. A 1 is stored at each product term address.

(b) AND/OR array logic

FIGURE 10–16 Two types of logic function generation in CPLDs.

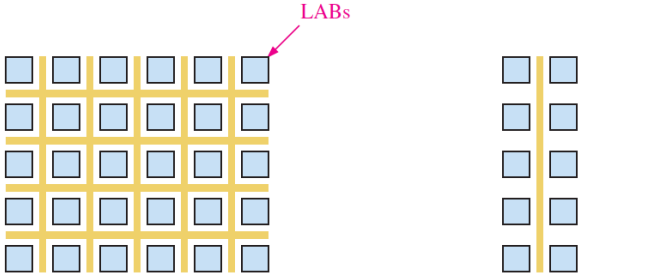

(a) Row/column interconnects

(b) Channel-type interconnect

FIGURE 10–17 LUT CPLDs have row/column interconnects. Classic CPLDs have channel-type interconnects.

PAL/PLA Comparison

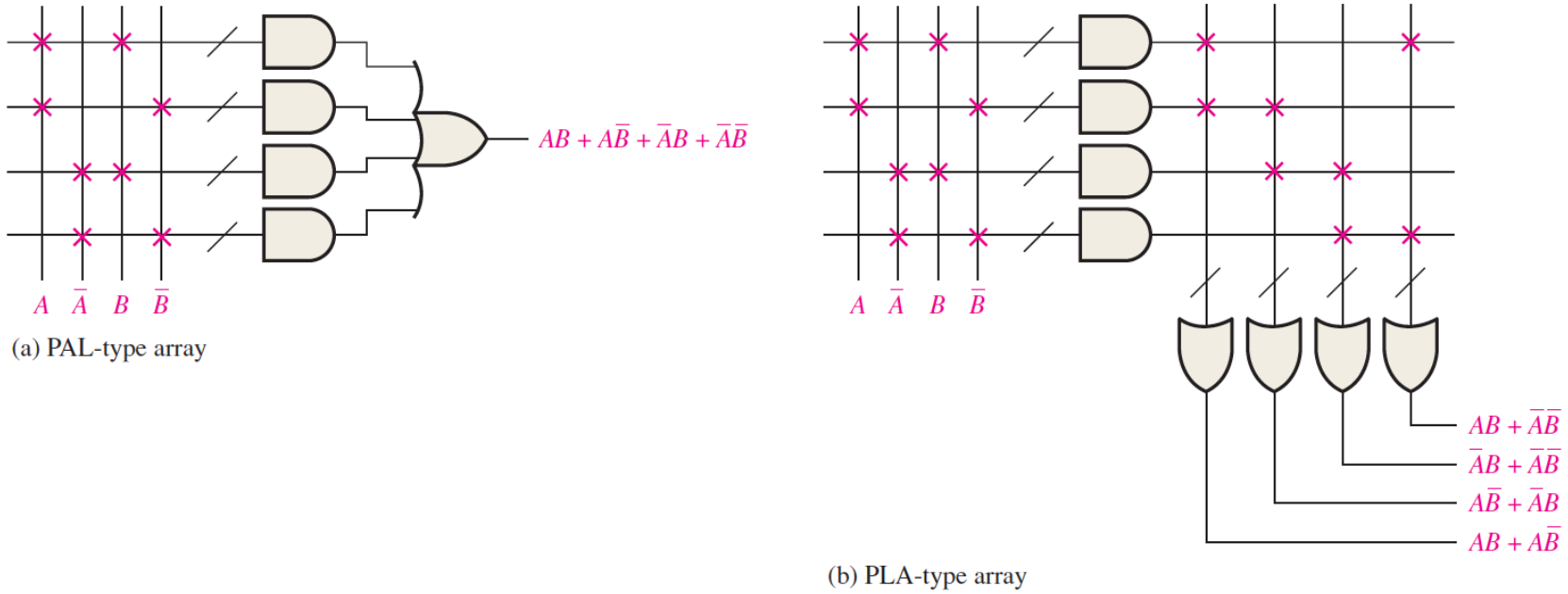

FIGURE 10–18 Comparison of a basic PLA to a basic PAL type PLD architecture.

Example of CPLDs

TABLE 10–1

CPLD manufacturers.

Manufacturer	Series Name	Design Software	Website
Altera	MAX	Quartus II	Altera.com
Xilinx	Coolrunner	ISE Design Suite	Xilinx.com
Lattice	ispMACH	ispLEVER classic	Latticesemi.com
Atmel	ATF	ProChip Designer	Atmel.com

TABLE 10–2

Selected CPLD parameters.

Feature	Range
Number of macrocells	10–1700
Number of LABs	10–221
Maximum operating frequency	20.4 MHz–400 MHz
Number of I/Os	10–1156
DC operating voltage	1.8 V, 2.5 V, 3.3 V, 5 V

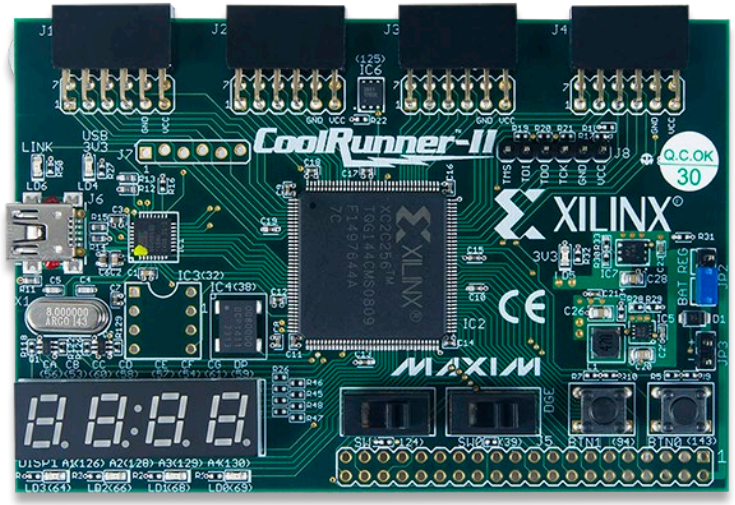

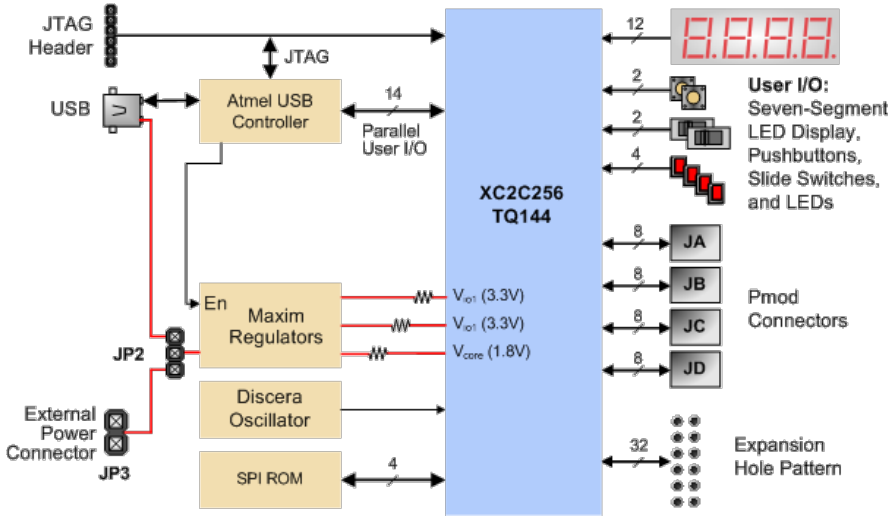

3. Field-Programmable Gate Arrays (FPGAs)

Field-Programmable Gate Arrays (FPGAs)

- Use different architecture from CPLD.
- Not use PAL/PLA type arrays.
- Has much greater density.
- Has much smaller logic-producing elements.

3 Basic Elements

- CLBs : Configurable Logic Blocks
  - CPLD LABs
- The interconnections
- The input/output blocks

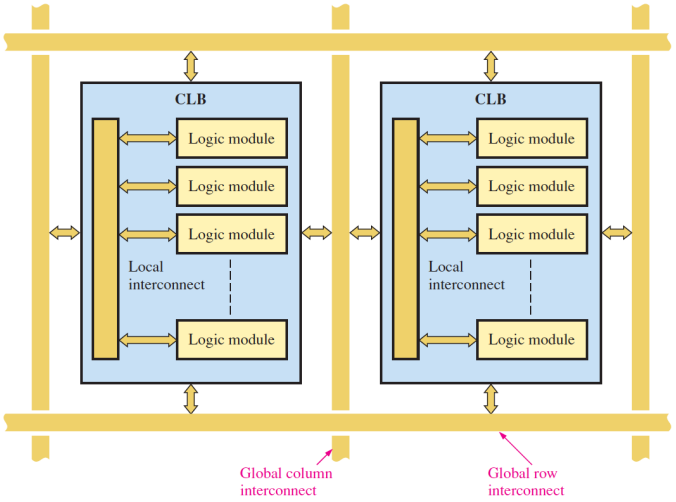

FIGURE 10–24 Basic configurable logic blocks (CLBs) within the global row/column programmable interconnects.

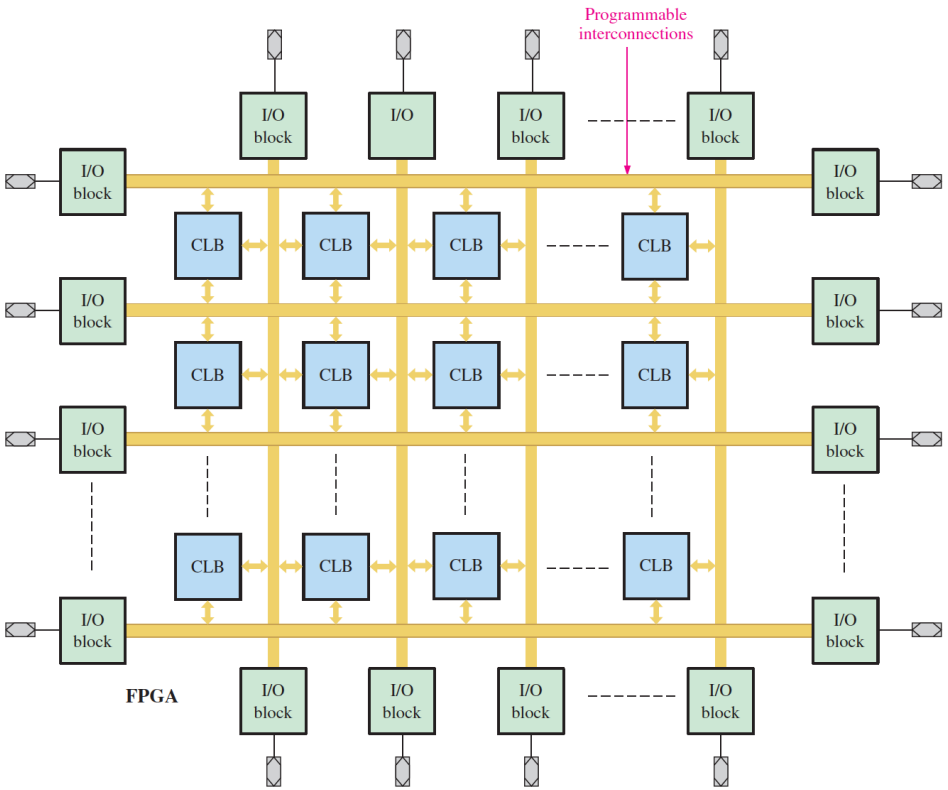

FIGURE 10–23 Basic structure of an FPGA. CLB is configurable logic block, also known as logic array block (LAB).

CLB : Configurable Logic Block

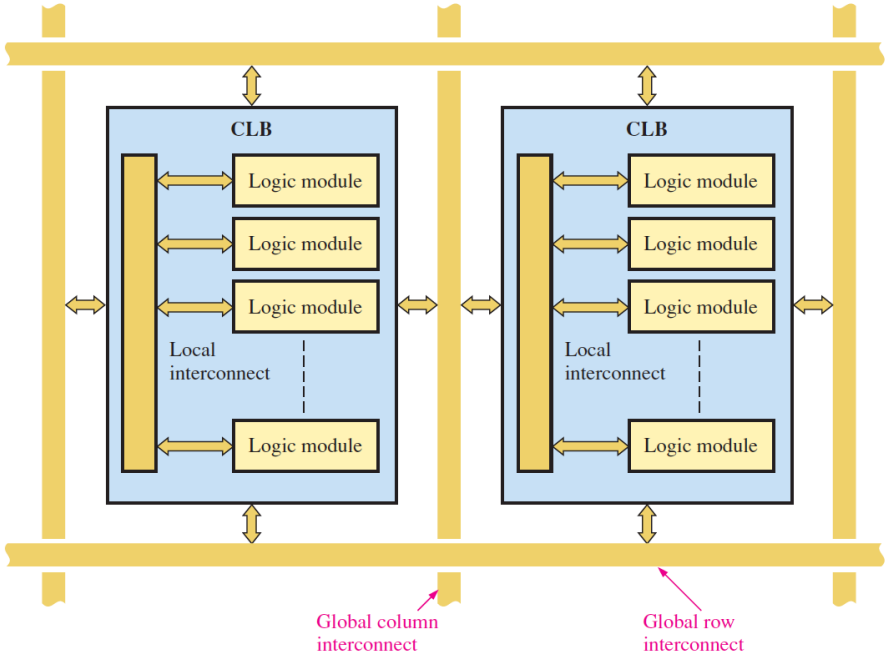

FIGURE 10–24 Basic configurable logic blocks (CLBs) within the global row/column programmable interconnects.

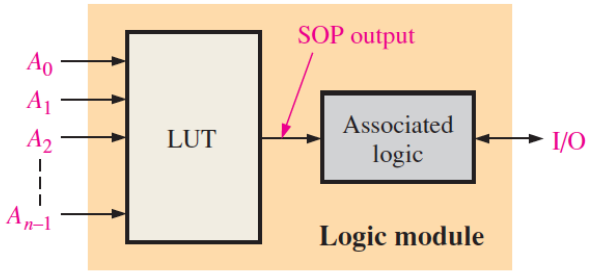

$$\bar{A}_2\bar{A}_1\bar{A}_0 + \bar{A}_2A_1A_0 + A_2\bar{A}_1A_0 + A_2A_1A_0$$

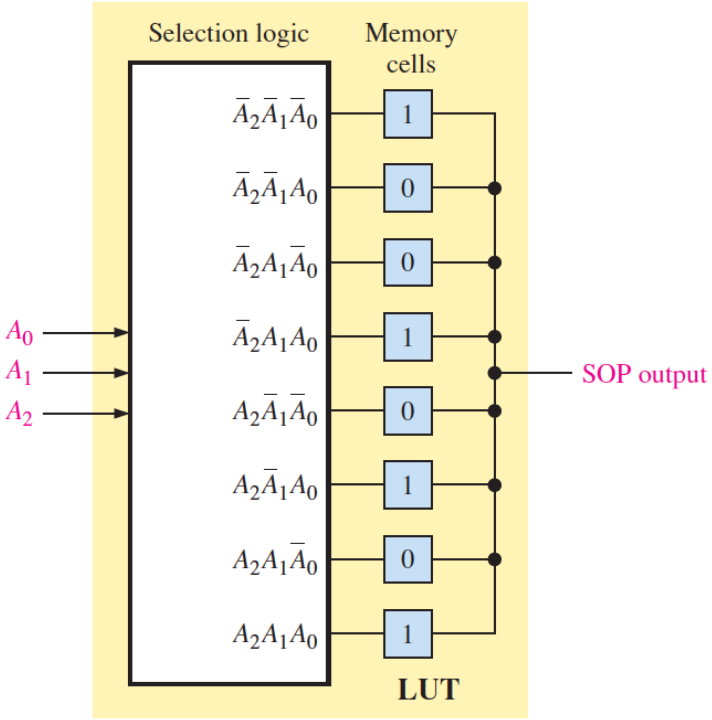

FIGURE 10–26 The basic concept of an LUT programmed for a particular SOP output.

SRAM-Based FPGA

- Volatile FPGA
- Need to be reprogram on power up or reset.
- Need nonvolatile memory
  - On FPGA chip
  - External memory chip

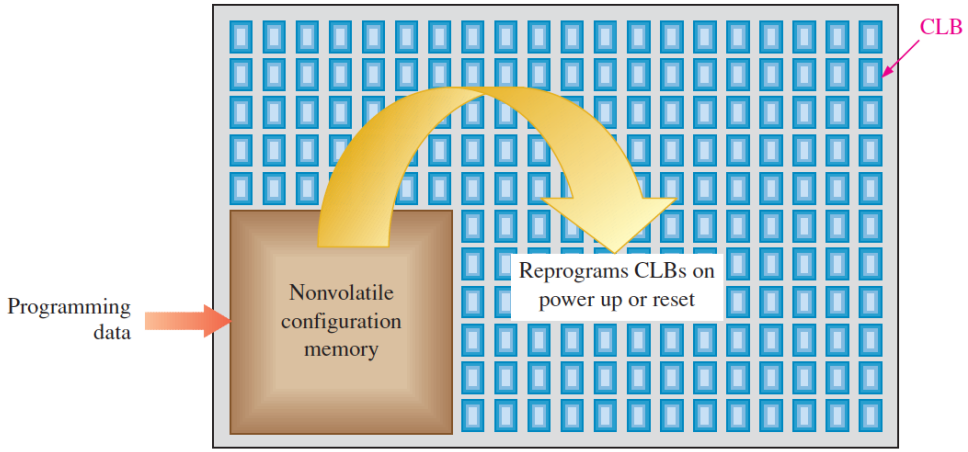

(a) Volatile FPGA with on-the-chip nonvolatile configuration memory

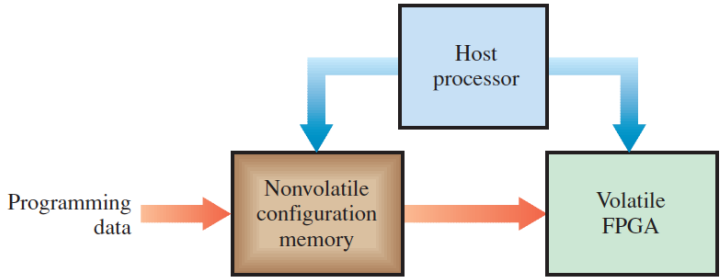

(b) Volatile FPGA with on-board memory and host processor

FIGURE 10–31 Basic concepts of volatile FPGA configurations.

Example o FPGA

TABLE 10–3

FPGA manufacturers.

Manufacturer	Series Name(s)	Design Software	Website
Altera	Stratix Aria Cyclone	Quartus II	Altera.com
Xilinx	Spartan Artix Kintex Virtex	ISE Design Suite	Xilinx.com
Lattice	iCE40 MachX02 Lattice ECP3 LatticeXP2 LatticeGC/M	Lattice Diamond iCEcube2	Latticesemi.com
Atmel	AT40	IDS	Atmel.com

TABLE 10–4

Selected FPGA parameters.

Feature	Range
Number of LEs	1,500–813,000
Number of CLBs	26–359,000
Embedded memory	26 kb–63 Mb
Number of I/Os	18–1200
DC operating voltage	1.8 V, 2.5 V, 3.3 V, 5 V

Basys 3 FPGA Board

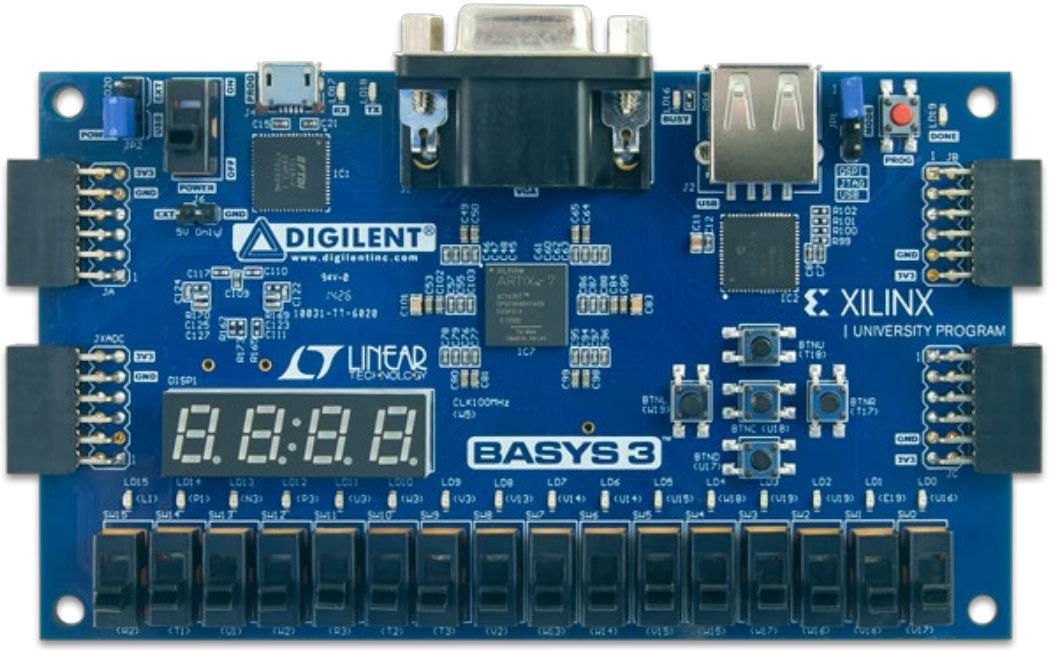

Basys 3 - Digilent Reference

Basys 3 Artix-7 FPGA Trainer Board	
Features	
On-chip analog-to-digital converter	
Key Specifications	
FPGA Part #	XC7A35T-1CPG236C
Logic Cells	33,280 in 5200 slices
Block RAM	1,800 Kbits
DSP Slices	90
Internal clock	450 MHz+
Connectivity and Onboard I/O	
Pmod Connectors	3
Switches	16
Buttons	5
User LED	16
7-Seg Display	4-Digit
VGA	12-bit
USB	HID Host (KB/Mouse/Mass Storage)
Electrical	
Power	USB 5v (Pins)
Logic Level	3.3v
Physical	
Width	2.8 in
Length	4.8 in
Design Resources	
Mechanical Drawing	DXF

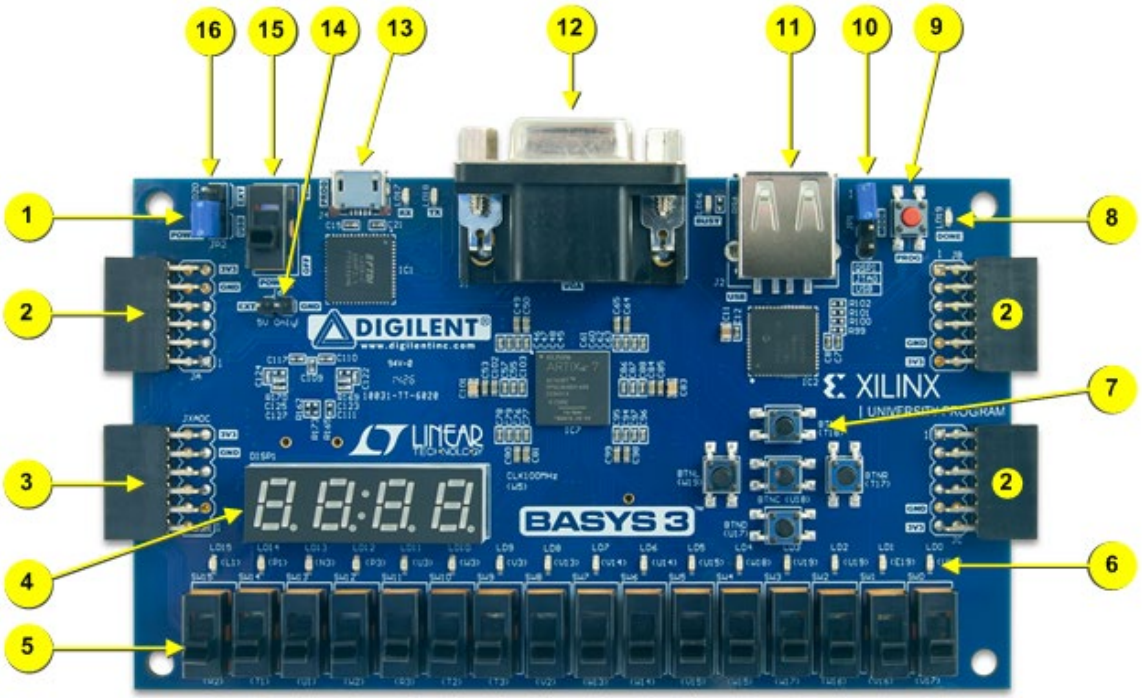

Figure 1. Basys3 board features

JTAG Programming

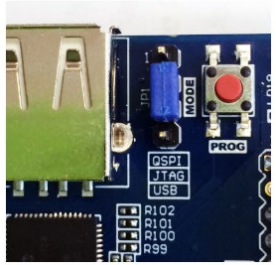

Quad SPI Programming

USB Host Programming

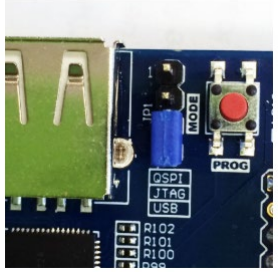

Callout	Component Description	Callout	Component Description
1	Power good LED	9	FPGA configuration reset button
2	Pmod connector(s)	10	Programming mode jumper
3	Analog signal Pmod connector (XADC)	11	USB host connector
4	Four digit 7-segment display	12	VGA connector
5	Slide switches (16)	13	Shared UART/ JTAG USB port
6	LEDs (16)	14	External power connector
7	Pushbuttons (5)	15	Power Switch
8	FPGA programming done LED	16	Power Select Jumper

Basys 3 Reference Manual - Digilent Reference

THANK YOU